Titan flowdown

...an informative bulletin from Titan Enterprises - the *low flow experts*

Welcome to the **Spring 2020** issue of fLowdown - a quarterly Newsletter from Titan Enterprises Ltd. written to keep you informed about the latest technological developments, applications advances and breaking news in the field of flow measurement.

If a particular feature interests you do not hesitate to contact us or follow the link for further information. We welcome your feedback.

Trevor Forster *(Managing Director)*

Click icon to visit our website blog for up to date news.

Trevor's Technical Tip

Trevor Forster is our Managing Director, his experience in fluid handling dates back to the mid 1960's when he started working on rotating seals and flowmeter design for third party clients. Trevor draws upon over 40 years of using innovative design and production techniques to produce elegant flow metering solutions for organisations around the globe. In this issue - Trevor offers you useful technical tips on:

What Makes A Good Product Design Strategy?

Drawing upon over 40 years of experience of management and new product development I have become a great believer in keeping things as simple as possible but this philosophy in itself can cause problems. Recently I was pushing the Titan development team to reduce the number of components in a new product to decrease manufacturing costs inventory and create a speedier flow meter assembly. This led us down a very protracted development route which delayed the product launch. Some of these cost reductions were beneficial but sometimes we ended up with a similar configuration to the initial design but with months lost trying to solve problems created by the newly introduced ideas. Nevertheless, I actively encourage exploring new ideas: we all learn even from mistakes and several of the greatest inventions of all time have been the results of an accident or an erroneous test, so you never quite know where something new may take you! Post-it notes are a perfect example of this where the development of an apparently useless, weak, pressure sensitive adhesive found an application that had not existed before.

How good is good enough?

When to stop developing a product is usually a commercial decision. Have the design criteria been met? Yes - well let's now make it a product. However, a product designer will often say, but we can make it better. It takes a commercial head to say stop now and productionise it!

For instance, we could very easily make a very low-cost ultrasonic meter accurate to 5% with a ten or twenty to one flow range. But it would have low repeatability and a very poor temperature coefficient and no flexibility in its usefulness. Consequently, it would be only a little better than a full/empty pipe indicator.

Our design philosophy at Titan is we prefer to put development time into new products that will remain accurate and reliable. However, design criteria for OEM flowmeter developments are completely different. Here we have a design specification to achieve and the customer has the devices manufactured by us in their name and their logo on the box.

Is the Keeping It Simple design philosophy always the best?

Keeping it simple product design is often a sound strategy unless the application is critical and some redundancy is paramount in the system for safety reasons. Extra features are lovely but how many of us use all our smart-phones capabilities? Like the smart phone we are constantly producing more features for our electronic products to aid use, help solve unforeseen problems or aid trouble shooting. They are progressively becoming more complicated and edging away from the basic reasons for their original development. The basic product design, however, started simple the further development has introduced the more complicated functions. Get the basics right, with a mind on future development, and then add features; don't start with a list of features and then struggle to attain them all.

If it is not broken don't try to fix it!

This is nearly always a good place to start a product development. When faced with a blank sheet of paper and total free reign let your ideas pour out but do not be afraid to back-off and introduce well tried and tested elements. The new ideas are always worth exploring and, in my opinion, should not be dismissed out of hand. The smallest design detail can make a big difference to a products production and lifespan and should be given due consideration. I have found that "sweating the small stuff" is a good route to a reliable overall product. Do not dismiss the details as secondary to the whole job.

A real life example

The VW Beetle is perhaps a suitable example of excellent product design principles. The combination of production techniques and simplified processes make it a design classic. It is not hard to service and remains reliable even when poorly maintained in harsh conditions and on the odd occasion is goes wrong it is very easy to repair. With examples having been used in the Arctic and in the desert, it has proven itself to be truly ubiquitous being re-configured into a host of other vehicle types. It utilises inherent strength in pressed steel and a simple design philosophy to great advantage. It may not be the first choice for a car enthusiast as the drive is coarse and noisy but over twenty million have been produced over its sixty-year manufacturing period so people's wallets have done the talking. Some features where interpretations of existing reliable parts of other vehicle ideas so it is in effect not a new design but simply the best parts of other products all brought together in a package with innovative features. This does not take anything away from Ferdinand Porche or the design team involved, spotting and using good ideas is to be celebrated, don't re-invent the wheel! During the Second World War its production was rejected by Citroen and after the war Rootes in England and Ford in America also dismissed the car as being out of tune with modern times. This one product encapsulates all three of the points I made at the start. It is more than good enough, it is very simple and the fundamental design criteria have been brought forward into modern versions of th e same device.

To discuss a new flow measurement product design, **click here**.

Flow Technology Spotlight

An Introduction to Pulse Output Devices

Within the flow meter industry, the use of pulse output devices to signal flow is commonplace and we often assume all our customers are also familiar with them. However, across the diverse application areas we serve, this is not always the case.

All of our flow meters are designed with a square wave pulse output as below.

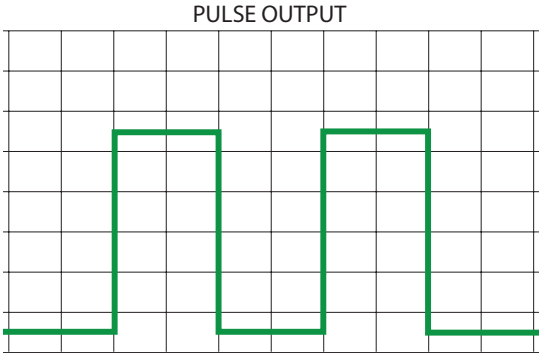

Graphic representation of pulsation signal

Titan Enterprises produce five main types of pulse generating flow meters, each of which output in proportion to the flow from the meter. These comprise Hall Effect transistors, Reed switches, Namur sensor and an optical detector all of which are activated by a rotating turbine or gear from our mechanical meters. In addition, we also offer a range of ultrasonic meters which also provide a pulse output. The scope of this article is to cover most commonly utilised pulse types in standard industrial use. For those of you interested in intrinsically safe flow systems, where more complex Namur sensors are used, please **click here** for further information.

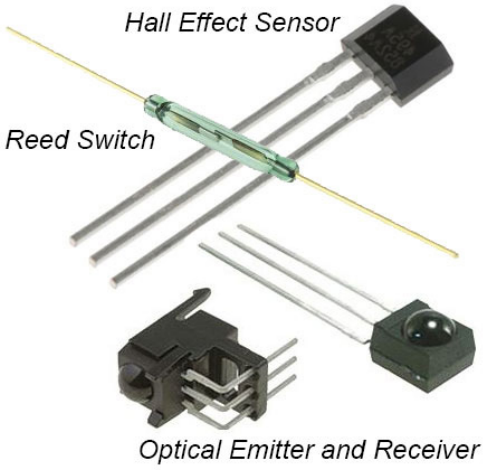

Different types of pulse output devices

Hall Effect Sensors

Hall Effect sensor devices offer fantastic stability and lifespan, as well as being able to operate at high

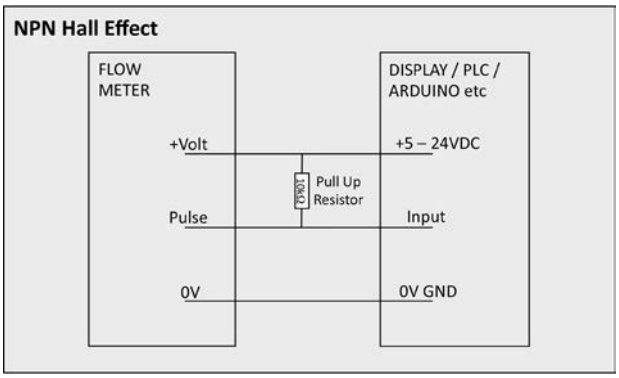

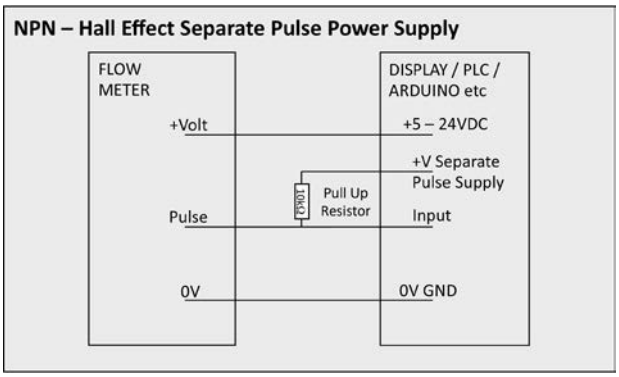

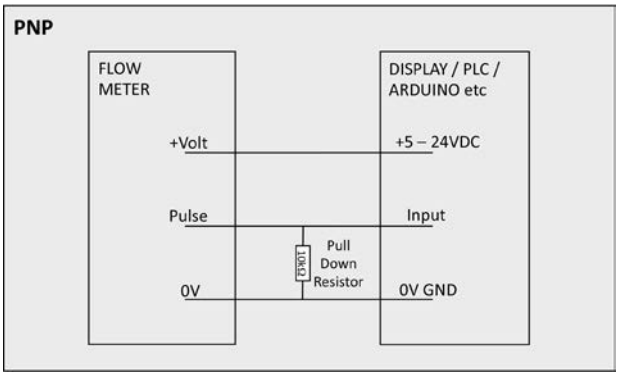

frequency. They use solid state transistors to allow power to pass through in one direction, when activated by a magnetic field passing across them. There are two types of Hall Effect sensors, your choice of which depends on how you wish to operate. Each sensor has three wires and requires both a 5-24v dc power supply and a resistor, (typically 10KOhm). They operate as NPN “sinking” or PNP “sourcing”. An NPN “sinking” sensor requires a “Pull up” resistor across the positive power and the pulse output wire. When the NPN transistor is inactive the power flows to the pulse output wire via the resistor. When activated by a magnet in the rotating turbine or gear, the NPN sinks to the zero volt wire, and the signal output value drops. As flow passes through the meter, the sensor is continually switched on and off in proportion, giving the pulse output. PNP or “sourcing” Hall Effect sensors operate in reverse and the Resistor (Pull Down), is placed between the Pulse output wire and the zero volts. When activated the power switches from the zero volt to the pulse output wire.

Reed Switches

Reed switches are activated in the same fashion as Hall Effect devices, with a magnet passing across them. As simple physical switching devices, connecting and disconnecting an input/output connection, Reed Switches

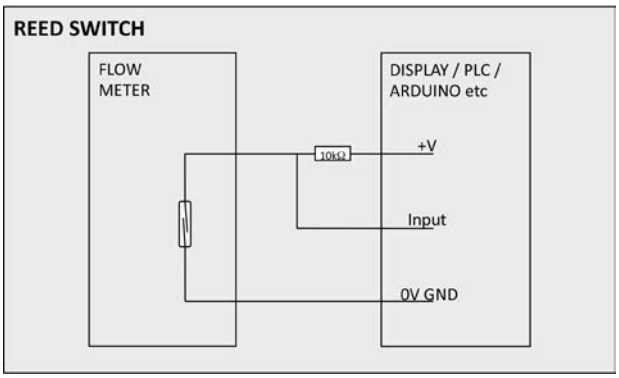

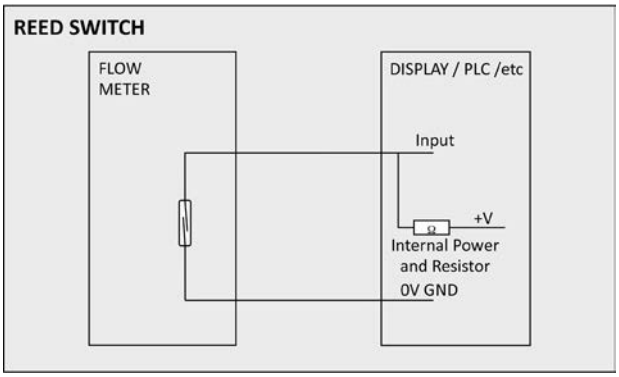

only require two wires and can operate on much lower power than a Hall Effect sensor. This is advantageous where you wish to use battery units or operate in hazardous (ATEX) environments. As Reed Switches are mechanical devices they are not as stable at high frequencies (200Hz max) and do have a more limited lifespan of operation than a Hall Effect sensor. In particular, Reed Switch contacts can literally ‘bounce’ when opening and closing and care needs to be taken to avoid several pulses being mistakenly counted when a single open or close action occurs. As a result - flow meters often have ‘debounced’ reed inputs specifically designed to do this.

Optical Sensors

Optical sensors are occasionally used on turbine flow meters, as they can offer high low flow performance for applications involving clear fluids. The infrared optical sensor systems employed by Titan are transistor based, similar to the Hall Effect NPN sinking devices. With these optical sensors - the output from a light source is broken

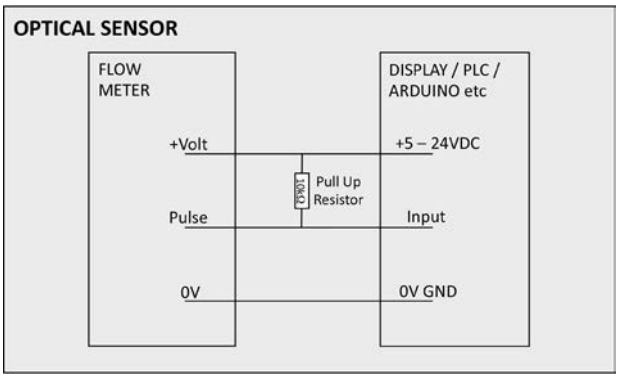

by the rotating turbine blade causing the signals to the output to pulsate. As the turbine does not require magnets mounted on it to activate the pulse, a much lighter design can be used, so improving the low flow performance.

Ultrasonic Devices

Ultrasonic flow meters are different to other types of flow device in that they measure flow without using any moving parts and so have no rotating or repeating aspect which can create pulses directly. The flow is determined by an algorithm producing a number which exactly represents the flow at that instant. This number is used to synthesize a pulse output (square wave) based on a parameter (often represented as “pulses per unit” or something similar, usually controlled by the user) which in turn is converted to an NPN or PNP type output as described previously.

In conclusion

One of the most common problems experienced by flowmeter users is unfamiliarity of the termination requirements of their control/indicating equipment. To utilise the different types of pulse output you must be able to connect to a system which can read it, such as a display or a signal processing device. However, flow meter users often need to integrate directly with their control systems. A PLC device is typical but recently we have been getting enquiries for connecting to Arduino or similar electronic interfaces as well. Whatever the device, without the correct wiring it will not operate and sensors can even be damaged, so it is always important to refer to the manual and understand the electronic configuration requirements before installation.

For further information please **click here**.

How do I measure?

In this issue of fLowdown we discuss:

Why viscosity is so important when specifying a flow meter

Recently we were approached by a company who wanted to use one of our oval gear flow meters to measure the flow of a refrigerant. The customer was convinced that an oval gear flow meter would be fine with the flow rate and accuracy requirements of the application but they were wrong.

A lot of small oval gear flow meters are specified and calibrated using oil standards. Some flow meters are specified at a particular viscosity e.g. at 30cps. Flowmeters not intended for use at low viscosities are calibrated at perhaps 3cP on an oil and will increase the minimum flow point by perhaps 3 or 4 times to ensure the required accuracy.

At Titan we choose to calibrate using water which is non-lubricating and has a viscosity of around 1cP. This has the benefit of giving us a better idea of the meters performance and increases in viscosity will only improve things. However, with the aforementioned customer’s refrigerant having a viscosity of only 0.15cSt this low viscosity would give even our oval gear meters a hard time. The low viscosity refrigerant fluid would effectively make the necessary running clearance too large as more than the normal amount of this very thin liquid would simply by-pass the gears and not be metered. Operating with higher viscosity fluids reduces this slippage to an acceptable level. Further, as refrigerants are often volatile the resultant small local reductions in pressure could cause the liquid to partially vaporise compromising the performance even further.

What we advised the customer was that they needed a meter that operates well with low viscosities, has a low differential, instantaneous pressure loss and has characteristics that will not change significantly with small changes in the fluid properties. The solution was to use a small turbine flow meter that works better with these conditions as it is requires turbulent flow which the low viscosity refrigerant offers. Unlike positive displacement flowmeters the low-end performance of a small turbine meter actually improves as the viscosity drops so the Reynolds number increases keeping the device working in the turbulent area at lower fluid velocities.

For further information **click here.**

Problem Solved

How Flowmeters Help Filter Selection

Filters are widely used in many industrial processes to remove particulates from a fluid flow. When selecting an appropriate filter many process engineers would prefer to make their selection based upon their required filtration level and desired service interval rather than get involved with the filters design or testing requirements. By comparison, filter manufacturers and specialist suppliers of filtration equipment take a far more considered view of things.

Across different industries a number of filter efficiency testing standards have been developed though all utilise very similar test procedures.

A typical filter efficiency testing procedure uses a simple circuit consisting of a fluid reservoir, contaminant to be removed injection point, a pump and the filter under test. Monitoring of the loop is usually done using particulate counting equipment before and after the filter to test the removal efficiency. In addition, the set-up uses a differential pressure gauge to monitor the pressure loss across the filter when a known amount of added contaminant has been removed by the filter. And finally, a flow meter, usually installed after the filter, to measure the volumetric throughput of fluid through the system.

Using this set-up - particle size and contaminant removal efficiency can be recorded giving vital technical information for a filter manufacturer, filtration equipment supplier and ultimately more information for a process engineer to aid their selection of the optimum filter for their application.

Over the last decade, Titan has worked with several filter manufacturers to develop optimised flowmeters to meet the different demands of their particular test rigs. The flowmeters developed range from quite low flow devices through to larger systems and even bypass filtration systems. In bypass filtration applications - a continuous measurement is made of the flow through the filter where the majority of the flow bypasses the element but the proportion that is filtered is usually to a much higher level than could be readily achieved with a full flow filter. Over time the whole of the fluid is thus filtered to a very high standard.

For further information on flowmeter set-ups for helping test the efficiency of your filtration systems please **click here**.

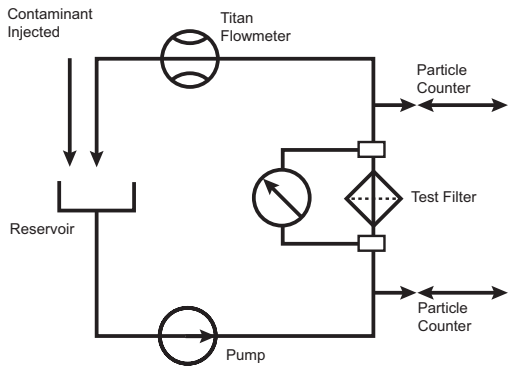

News Updates:

Monitoring Laser Cooling Systems

Predominantly in high-power lasers, there is a substantial amount of heat generated particularly in the laser gain medium due to incomplete conversion of pump power into optical output power. In the case of diode pumped lasers, the diodes also generate heat. In order to avoid excessive temperatures, which could degrade the performance or even damage the laser, that heat has to be removed from the device. For that purpose, special laser cooling units have been developed.

If space is really tight - incorporating a direct chiller unit may be an option but by far the simplest solution to protect your laser is to use a water chiller unit. Monitoring set-ups for chiller units range from the extremely simple to devices to measure both flow and temperature control to ensure the correct balance of energy extraction from the laser to ensure an acceptable running and working temperature. At Titan we supply several laser companies with OEM flowmeters to monitor their cooling systems and thereby ensure the safe operation of their lasers.

To discuss a flowmeter optimised to monitor your laser chiller unit please **click here**.

Customer Resources Web Page

By popular demand we have produced a new web page that brings together a collection of organised internal links to useful flow measurement resources within our website. On this resources page you will find direct links to back issues of our fLowdown newsletter, technical articles, helpful flowmeter selection guides, interviews, case studies, device calibration and our web blog.

Visit the customer resources web page now – **click here**.

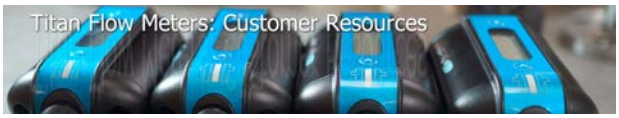

Product Focus:

Hastelloy C Oval Gear Flowmeters for Hazardous Applications

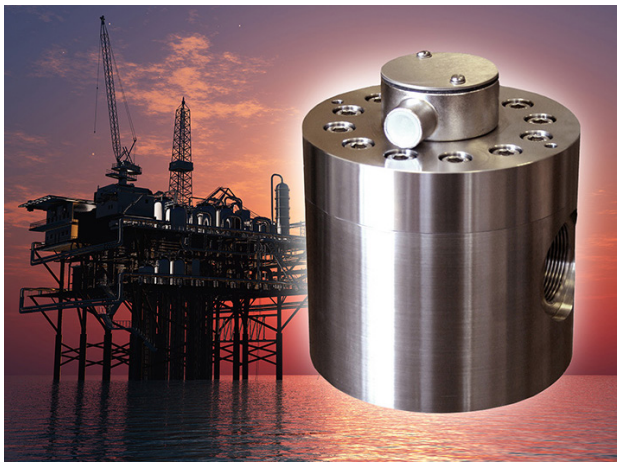

Based upon a proprietary oval gear design, Titan Enterprises OG Series flowmeters are designed to give reliable, high performance.

For more challenging applications, Hastelloy C is the material of choice for our OG Series flowmeters because it offers excellent corrosion resistance, can withstand high temperatures, high pressures, and is more inert in highly oxidizing atmospheres. Hastelloy C is considered to be more effective for these application scenarios than Stainless Steel 316 due to its specific composition, which has more nickel in it

When constructed from Hastelloy C and PEEK™ - our compact OG flowmeters are perfect for measuring flow at pressures up to 700 bar and 150°C. Designed to be IP-67 / NEMA 4 compliant, Titan Hastelloy C OG Series high pressure flowmeters are available in standard and customer specified configurations.

Unlike other flowmeters, the measurement accuracy of oval gear flowmeters improves as liquid viscosity increases, from a nominal one per cent to perhaps 0.1 per cent of flow rate at higher viscosities. In our high pressure OG Series flowmeters, oval shaped, toothed gears rotate within a chamber of specified geometry. As these gears turn, they sweep out and trap a very precise volume of fluid between the outer oval shape of the gears and the inner chamber walls, with none of the fluid actually passing through the gear teeth.

Ceramic or Teflon® coated magnets are embedded in the gears, which then actuate a reed switch, Hall effect sensor or ATEX approved sensor (NAMUR) to provide a pulse output. Each pulse or switch closure then represents a precise increment of liquid volume that passes through the meter. The result is highly accurate flow measurement almost immune from the effects of varying fluid viscosity, density and temperature.

For further information, **click here**.

Humour

Here is some engineer humour to make you smile!

An engineer commented "I decided to make my password "incorrect" because if I type it in wrong, my computer will remind me, "Your password is incorrect."

Client: "How do you estimate how long a project will take?"

Engineer: "I add the time needed for each activity, then multiply by pi."

Client: "Why multiply by pi?"

Engineer: "It explains why my estimates are always irrational."

fLowdown Back Issues

All back issues of fLowdown are available to view/download in Titan Enterprises website

To view past issues – **click here**.

TITAN ENTERPRISES LTD.

Coldharbour Business Park, Sherborne, Dorset DT9 4JW. UK

Phone: +44 (0)1935 812790

Email: **sales@flowmeters.co.uk**

www.flowmeters.co.uk